Summary in Graph

Exam Summary (GO Classes CS 2026 | All India Mock Test 6)

Qs. Attempted:	0 (0 + 0)	Correct Marks:	0 (0 + 0)
Correct Attempts:	0 (0 + 0)	Penalty Marks:	0 (0 + 0)
Incorrect Attempts:	0 (0 + 0)	Resultant Marks:	0 (0 + 0)

Total Questions:	65 (30 + 35)
Total Marks:	100 (30 + 70)
Exam Duration:	180 Minutes
Time Taken:	0 Minutes

Individual Question Statistics

Select Metric: Marks Obtained

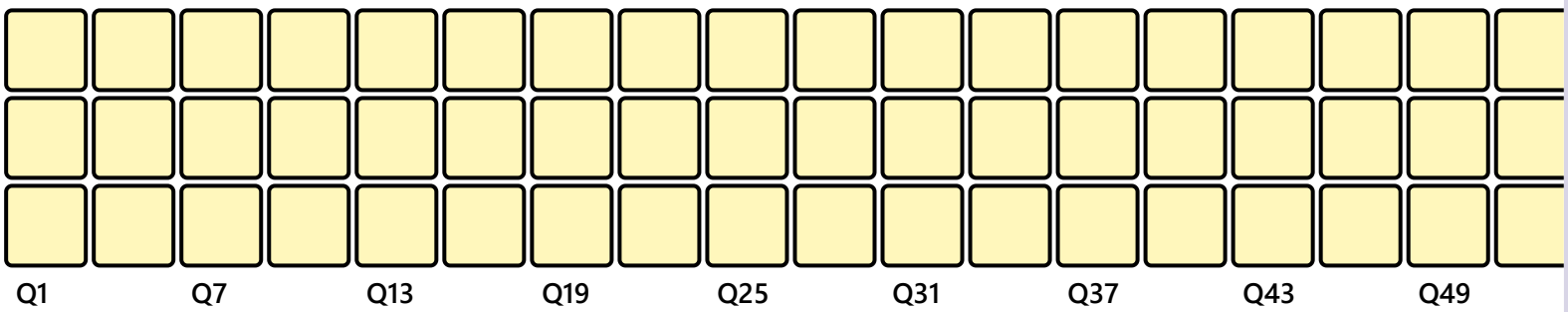

* Average Stats based on first-attempt stats of Top 10% (54) out of 537 users

EXAM RESPONSE EXAM STATS FEEDBACK

Aptitude

Q #1 Multiple Choice Type Award: 1 Penalty: 0.33 Analytical Aptitude

Six numbers $1, 3, 5, 6, 7$ and 8 are written on different faces of a dice. Two positions of this dice are shown in the figure. Which is the number on the face opposite to the face containing 6?

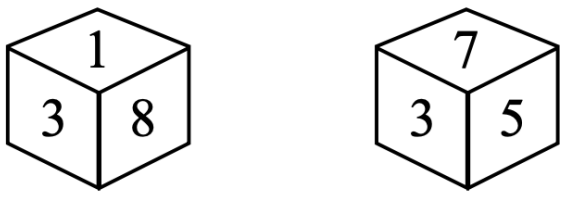

A. 5
B. 7
C. 3
D. 8

Your Answer: | Correct Answer: C | Not Attempted | Time taken: 00min 00sec | Discuss

Q #2 Multiple Choice Type | Award: 1 | Penalty: 0.33 | Quantitative Aptitude

Savanah tossed a fair coin some number of times and 50% of those tosses resulted in tails. She then tossed the coin one final time and the result was tails. If 60% of all tosses resulted in tails, how many tosses did she make in total?

A. 3
B. 9
C. 8
D. 5

Your Answer: | Correct Answer: D | Not Attempted | Time taken: 00min 00sec | Discuss

Q #3 Multiple Choice Type | Award: 1 | Penalty: 0.33 | Spatial Aptitude

Which should be the correct pattern in the empty square?

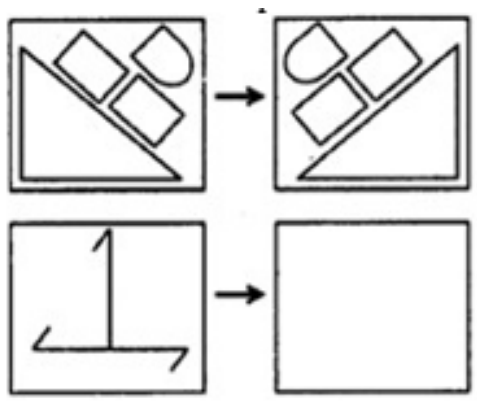

A.

B.

C.

D.

Your Answer: | Correct Answer: C | Not Attempted | Time taken: 00min 00sec | Discuss

Q #4 Multiple Choice Type | Award: 1 | Penalty: 0.33 | Quantitative Aptitude

A positive integer whose digits are the same when read forwards or backwards is called a *palindrome*. An example of a palindrome is 13931. What is the sum of the digits of the next palindrome greater than 13931?

A. 14
B. 11
C. 19
D. 10

Your Answer: | Correct Answer: D | Not Attempted | Time taken: 00min 03sec | Discuss

Q #5 | Multiple Choice Type | Award: 1 | Penalty: 0.33 | Verbal Aptitude

Choose the most appropriate word(s) from the options given below to complete the following sentence.

We lost confidence in him because he never _____ the grandiose promises he had made.

A. delivered
B. delivered on
C. forgot
D. reneged on

Your Answer: | Correct Answer: B | Not Attempted | Time taken: 00min 00sec | Discuss

Q #6 | Multiple Choice Type | Award: 2 | Penalty: 0.67 | Quantitative Aptitude

Raju has 14 currency notes in his pocket consisting of only Rs. 20 notes and Rs. 10 notes. The total money value of the notes is Rs. 230. The number of Rs. 10 notes that Raju has is

A. 5
B. 6
C. 9
D. 10

Your Answer: | Correct Answer: A | Not Attempted | Time taken: 00min 00sec | Discuss

Q #7 | Multiple Choice Type | Award: 2 | Penalty: 0.67 | Verbal Aptitude

A boat can cover a distance of 7.2 km downstream and 3.2 km upstream in 2 hours. It can also cover 1.5 km downstream and 0.6 km upstream in 24 minutes. What is the speed of the boat when going downstream (in $\mathrm{km/h}$) ?

A. 6

B. 4.5

C. 5

D. 7.5

Your Answer: | Correct Answer: A | Not Attempted | Time taken: 00min 00sec | Discuss

Q #8 | Multiple Choice Type | Award: 2 | Penalty: 0.67 | Quantitative Aptitude

Kiran has a box containing three different types of fruit: apples, pears, and bananas. In the box, 21 pieces of fruit are not apples, 25 pieces of fruit are not pears, and 28 pieces of fruit are not bananas. How many pieces of fruit are in the box?

A. 53
B. 32
C. 46
D. 37

Your Answer: | Correct Answer: D | Not Attempted | Time taken: 00min 00sec | Discuss

Q #9 | Multiple Choice Type | Award: 2 | Penalty: 0.67 | Quantitative Aptitude

A man spent 60% of his salary on household expenses, 20% of his salary on rent and out of the remaining salary, he donated 80% to a trust. If he is left with ₹$20,000$, then what is his salary?

A. ₹$4,00,000$
B. ₹$5,00,000$
C. ₹$5,50,000$
D. ₹$50,000$

Your Answer: | Correct Answer: B | Not Attempted | Time taken: 00min 00sec | Discuss

Q #10 | Multiple Choice Type | Award: 2 | Penalty: 0.67 | Quantitative Aptitude

Sarah has a very specific procedure for describing sequences of black and white squares:

- If all the squares of a sequence are white, she writes W.
- If all the squares of a sequence are black, she writes B.
- Otherwise, she writes X, and then applies the same procedure first to the left half of the sequence and then to the right half.

Below are four examples of sequences and what Sarah writes to describe each of them.

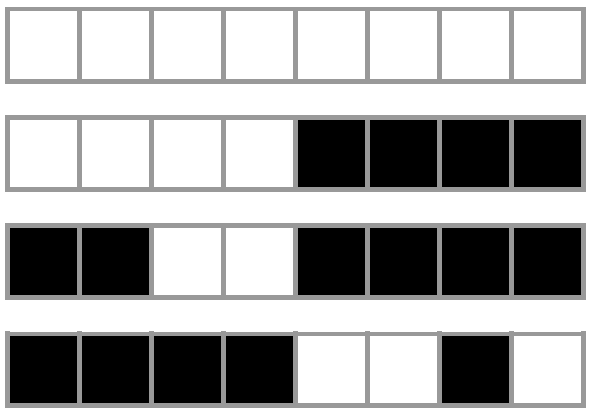

W

XWB

$XXBWB$

$XBXWXBW$

What does Sarah write when using her procedure to describe the following sequence?

A. $XXXWBWXBXBW$

B. $XXXWBXWWXXBBXBW$

C. $XWBWXBBW$

D. $XXXBWBXWXWB$

Your Answer: | Correct Answer: A | Not Attempted | Time taken: 00min 00sec | Discuss

Technical

Q #1 | Multiple Select Type | Award: 1 | Penalty: 0 | Theory of Computation

Which of the following statements are true for at least one language $L \subseteq \{0,1\}^*$? (Evaluate each option independently.)

A. L^* is finite.

B. L^* is not regular.

C. L is accepted by an NFA with 374 states, and L is accepted by a DFA with 374 states.

D. L is accepted by a DFA with 374 states, but L is not accepted by a NFA with 374 states.

Your Answer: | Correct Answer: A;B;C | Not Attempted | Time taken: 00min 00sec | Discuss

Q #2 | Multiple Choice Type | Award: 1 | Penalty: 0.33 | Digital Logic

$\mathrm{X} = 01110$ and $\mathrm{Y} = 11001$ are two 5-bit binary numbers represented in two's complement format. The sum of X and Y represented in two's complement format using 6 bits is

A. 100111

B. 001000

C. 000111

D. 101001

Your Answer: | Correct Answer: C | Not Attempted | Time taken: 00min 00sec | Discuss

Q #3 | Multiple Choice Type | Award: 1 | Penalty: 0.33 | Compiler Design

In the context of syntax directed definitions, an inherited attribute for a nonterminal B at a parse-tree node N is defined by a semantic rule associated with

A. the production at N.

B. the production at the parent of N.

C. the production at the left sibling of N.

D. the production at the child of N.

Your Answer: | Correct Answer: B | Not Attempted | Time taken: 00min 00sec | Discuss

Q #4 Multiple Choice Type | Award: 1 | Penalty: 0.33 | Digital Logic

In the sum of products function $f(X, Y, Z) = \sum(2, 3, 4, 5)$, the prime implicants are

A. $\overline{X}Y, X\overline{Y}$

B. $\overline{X}Y, X\overline{Y}\ \overline{Z}, X\overline{Y}Z$

C. $\overline{X}Y\overline{Z}, \overline{X}YZ, X\overline{Y}$

D. $\overline{X}Y\overline{Z}, \overline{X}YZ, X\overline{Y}\ \overline{Z}, X\overline{Y}Z$

Your Answer: | Correct Answer: A | Not Attempted | Time taken: 00min 00sec | Discuss

Q #5 Multiple Select Type | Award: 1 | Penalty: 0 | Operating System

TLBs are a critical part of modern paging systems. Assume the following system:

- Page size $= 64$ bytes
- TLB contains 4 entries
- TLB replacement policy is LRU (least recently used)

Each option below shows a virtual memory address trace, i.e., a sequence of virtual addresses accessed by a program, repeating indefinitely.

For which of the following traces will the presence of the 4-entry LRU TLB result in *at least one TLB hit* after execution begins, thereby reducing the number of page table lookups and improving execution time?

Select all that apply.

A. $0, 100, 200, 1, 101, 201, \ldots\ (\text{repeats})$

B. $0, 100, 200, 300, 0, 100, 200, 300, \ldots\ (\text{repeats})$

C. $0, 1000, 2000, 3000, 4000, 0, 1000, 2000, 3000, 4000, \ldots\ (\text{repeats})$

D. $0, 1, 2, 3, 4, 5, 6, 0, 1, 2, 3, 4, 5, 6, \ldots\ (\text{repeats})$

Your Answer: | Correct Answer: A;B;D | Not Attempted | Time taken: 00min 00sec | Discuss

Q #6 Numerical Type | Award: 1 | Penalty: 0 | CO & Architecture

Suppose we can divide the execution of an instruction into eight possible pipeline stages: $\text{S0} : 0.20\ \text{ns}$ $\text{S1} : 0.05\ \text{ns}$ $\text{S2} : 0.10\ \text{ns}$ $\text{S3} : 0.15\ \text{ns}$ $\text{S4} : 0.05\ \text{ns}$ $\text{S5} : 0.20\ \text{ns}$ $\text{S6} : 0.10\ \text{ns}$ $\text{S7} : 0.15\ \text{ns}$ However, inserting pipeline registers between stages requires adding $0.05\ \text{ns}$ to the time for the stage. If we use this proposed 8-stage pipeline, each clock cycle will be $0.25\ \text{ns}$ long. Suppose that we want to combine stages while maintaining the same clock rate. Identify which stages can be combined. What is the minimum number of pipeline stages that can be obtained after such combinations?

Your Answer: | Correct Answer: 6 | Not Attempted | Time taken: 00min 00sec | Discuss

Q #7 Multiple Choice Type | Award: 1 | Penalty: 0.33 | CO & Architecture

A computer has a memory system organized into four levels: level-1 and level-2 cache memories, main RAM memory, and secondary memory. Programs ready for execution are brought from secondary memory and turned into processes in main memory.

An instruction to access data in memory provides the actual memory address where the desired information is located. The information is then searched for in the level-1 cache. If it is not found there, it is searched for in the level-2 cache. If it is still not found, the information is finally fetched from main memory.

Which addressing mode is used?

A. Immediate.

B. Indirect.

C. Direct.

D. Implicit.

Your Answer: | Correct Answer: C | Not Attempted | Time taken: 00min 00sec | Discuss

Q #8 | Numerical Type | Award: 1 | Penalty: 0 | Operating System

Consider a process with a 64-byte virtual address space and a page size of 4 bytes. Each page table entry (PTE) occupies 1 byte. Consider the linear page table for this process. Only 4 valid PTEs are explicitly marked; all remaining PTEs are invalid.

PTE index	PTE status
0	valid
$\vdots$	$\vdots$
10	valid
$\vdots$	$\vdots$
14	valid
15	valid

To implement a multi-level page table, the linear page table is divided into page-sized chunks. A chunk is allocated only if it contains at least one valid PTE. How many entries in the outermost page table (page directory) are valid?

Your Answer: | Correct Answer: 3 | Not Attempted | Time taken: 00min 00sec | Discuss

Q #9 | Numerical Type | Award: 1 | Penalty: 0 | Computer Networks

A TCP sender experiences a timeout when its congestion window is $\text{cwnd} = 32\ \text{KB}$. The Maximum Segment Size (MSS) is $2\ \text{KB}$, and the receiver advertised window is $64\ \text{KB}$.

After the timeout, TCP resets its congestion window and increases it using standard TCP congestion control. Starting from the RTT immediately after the timeout, how many RTTs are required for the congestion window to reach $\text{cwnd} = 32\ \text{KB}$ again?
No data packets or ACKs are ever lost after the first timeout, and the sender always has data to send.

Your Answer: | Correct Answer: 11 | Not Attempted | Time taken: 00min 00sec | Discuss

Q #10 | Numerical Type | Award: 1 | Penalty: 0 | Combinatory

Consider the four cards shown below. Each card has a letter on one side and a natural number on the other side. The cards are placed on a table such that only one side of each card is visible, as shown. Minimum how many cards do you have to turn over to determine whether the following claim is true?
Claim: For each card, if the card has a vowel on one side, then it has an even number on the other side.

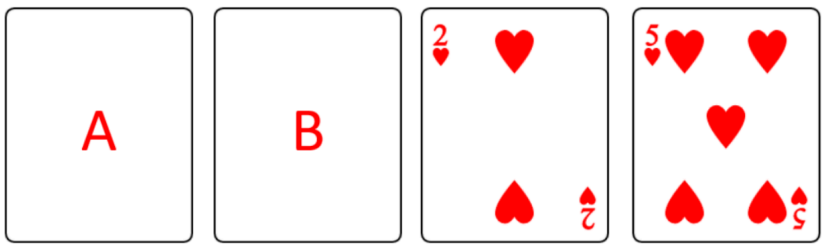

Your Answer: | Correct Answer: 2 | Not Attempted | Time taken: 00min 00sec | Discuss

Q #11 Multiple Select Type | Award: 1 | Penalty: 0 | Computer Networks

During the establishment of a TCP connection between host **A** and host **B**, host **A** sends a *SYN* packet to initiate the three-way handshake. In some situations, host **A** may need to *retransmit* the SYN packet.

Which of the following could be valid reasons for host **A** to retransmit the SYN packet?

A. The SYN packet sent from A to B is dropped by a router on the path.

B. The SYN-ACK packet sent from B to A is dropped by a router on the path.

C. The SYN-ACK packet is received by A after the retransmission timeout expires.

D. Host A retransmits the SYN packet after receiving the SYN-ACK packet from host B.

Your Answer: | Correct Answer: A;B;C | Not Attempted | Time taken: 00min 00sec | Discuss

Q #12 Multiple Select Type | Award: 1 | Penalty: 0 | Algorithms

Suppose we obtain the following BFS tree rooted at node 1 for an undirected graph with vertices $\{1, 2, 3, 4, 5, \ldots, 14\}$:

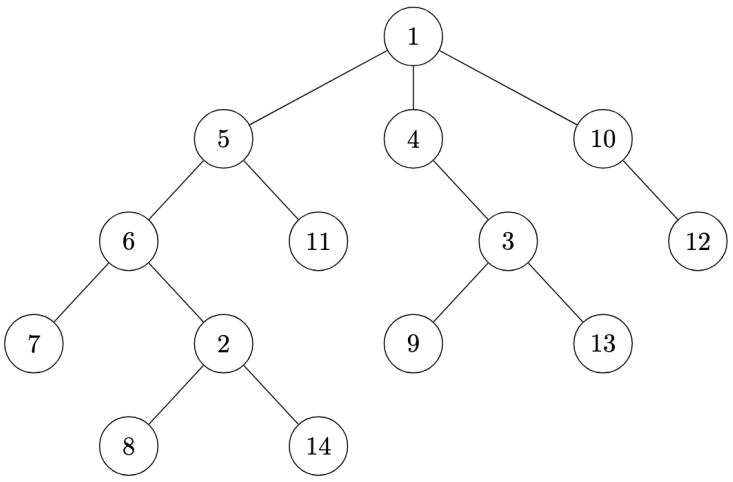

BFS Tree Levels

- Level 0: 1
- Level 1: $5, 4, 10$
- Level 2: $6, 11, 3, 12$
- Level 3: $7, 2, 9, 13$
- Level 4: $8, 14$

Which of the following **cannot** be edges in the original graph? **(Select all that apply)**

A. $(8, 11)$
B. $(3, 10)$
C. $(4, 5)$
D. $(6, 9)$

Your Answer: | Correct Answer: A | Not Attempted | Time taken: 00min 00sec | Discuss

Q #13 Multiple Choice Type Award: 1 Penalty: 0.33 Algorithms

Suppose we run Dijkstra's algorithm on a graph G, starting from a vertex v. Assume that:

- The only negative-weight edges in G are outgoing edges from v, and
- The graph contains no negative-weight cycles.

Which of the following statements is **correct**?

A. Dijkstra's algorithm will correctly find the shortest paths from v.
B. Dijkstra's algorithm may fail because negative edges are present.
C. Dijkstra's algorithm works only if all edges have strictly positive weights.
D. Dijkstra's algorithm works only if all negative edges are incoming to v.

Your Answer: Correct Answer: A Not Attempted Time taken: 00min 00sec Discuss

Q #14 Multiple Choice Type Award: 1 Penalty: 0.33 Algorithms

Consider an undirected connected graph with n vertices and m edges, where every edge in the graph has weight 1.

Which of the following statements is **correct**?

A. There exists an $O(m+n)$ time algorithm to find a minimum spanning tree by performing a breadth-first search.
B. A minimum spanning tree can be found only using Kruskal's or Prim's algorithm, both of which require $\Omega(m \log n)$ time.
C. The graph has a unique minimum spanning tree since all edge weights are equal.
D. A depth-first search always produces a spanning tree with strictly larger total weight than the minimum spanning tree.

Your Answer: Correct Answer: A Not Attempted Time taken: 00min 00sec Discuss

Q #15 Multiple Choice Type Award: 1 Penalty: 0.33 Data Structures

Suppose you have a priority queue implemented using a binary heap. You perform a sequence of n insert operations and n delete-min operations in such a way that the heap never contains more than $\sqrt{n}$ elements.

Which of the following statements about the total running time of all $2n$ operations is correct?

A. $O(n)$
B. $O(\sqrt{n} \log \sqrt{n})$
C. $O(n \log n)$
D. $O(\sqrt{n} \log n)$

Your Answer: Correct Answer: C Not Attempted Time taken: 00min 00sec Discuss

Q #16 Multiple Choice Type Award: 1 Penalty: 0.33 Data Structures

Suppose we have implemented a stack as a singly linked list with a tail pointer modeled here:

Which of the following best describes the running time of the push and pop operations if the bottom of the stack must be at the head of the linked memory structure? (n is the number of elements in the stack.)

A. $O(1)$ for both push and pop
B. $O(n)$ for both push and pop
C. $O(1)$ for push and $O(n)$ for pop
D. $O(n)$ for push and $O(1)$ for pop

Your Answer: | Correct Answer: C | Not Attempted | Time taken: 00min 00sec | Discuss

Q #17 | Multiple Choice Type | Award: 1 | Penalty: 0.33 | Data Structures

The following sequence of keys is inserted one by one into an initially empty binary search tree.

$$45,\ 65,\ 35,\ 40,\ 33,\ 70,\ 60,\ 75,\ 69$$

After completing all insertions, how many nodes are present in the left subtree and the right subtree of the root node?

A. The left subtree contains 3 nodes and the right subtree contains 5 nodes.
B. The left subtree contains 6 nodes and the right subtree contains 2 nodes.
C. The left subtree contains 2 nodes and the right subtree contains 6 nodes.
D. The left subtree contains 5 nodes and the right subtree contains 3 nodes.

Your Answer: | Correct Answer: A | Not Attempted | Time taken: 00min 00sec | Discuss

Q #18 | Multiple Choice Type | Award: 1 | Penalty: 0.33 | Programming in C

Consider the following C program:

```
int main()
{
  int *y;
  int x = 36;
  y = &x;
  /* code to be inserted here */
  printf("%d", x);
  return 0;
}
```

Which of the following choices, if inserted at the line marked, will result in 37 being printed on the standard output?

A. `*y++;`
B. `(*y)++;`
C. `y++;`
D. `++y;`

Your Answer: | Correct Answer: B | Not Attempted | Time taken: 00min 00sec | Discuss

Q #19 | Multiple Choice Type | Award: 1 | Penalty: 0.33 | Programming in C

Consider the following C program:

```
void myFun(int *x)
{
  int *y = (int *)malloc(sizeof(int));
  *y = 16;
  x = y;
  free(y);
}

int main()
{
  int i = 9;
  myFun(&i);
  printf("%d", i);
  return 0;
}
```

What is the result when this code is compiled and run?

A. Nothing. This code does not compile.
B. 16 is printed on the standard output
C. 9 is printed on the standard output
D. The program compiles but produces a runtime error

Your Answer: | Correct Answer: C | Not Attempted | Time taken: 00min 00sec | Discuss

Q #20 Multiple Choice Type | Award: 1 | Penalty: 0.33 | Programming in C

Suppose we have a two-dimensional array $A = (a_{ij})$ with m rows and n columns. The one-dimensional *row-major* representation of A is stored in an array $B = (b_k)$ of size mn. Assume that indexing in both arrays is zero-based.

For given indices i and j of the matrix A, the element a_{ij} is stored as b_k in array B. What is the correct expression for k in terms of i, j, m, n?

A. $k = ni + j$
B. $k = mi + j$
C. $k = nj + i$
D. $k = mi + n$

Your Answer: | Correct Answer: A | Not Attempted | Time taken: 00min 00sec | Discuss

Q #21 Multiple Choice Type | Award: 1 | Penalty: 0.33 | Calculus

Consider the function $f(x) = x^2 - x - 2$. The maximum value of $f(x)$ in the closed interval $[-4, 4]$ is

A. 18
B. 10
C. -2.25
D. indeterminate

Your Answer: | Correct Answer: A | Not Attempted | Time taken: 00min 00sec | Discuss

Q #22 Multiple Choice Type Award: 1 Penalty: 0.33 Calculus

Let M be the matrix $\begin{pmatrix} 2 & 3 \\ 1 & -1 \end{pmatrix}$. Which of the following matrix equations does M satisfy?

A. $M^2 + 3M + 5I = 0$

B. $M^3 - M^2 - 5M = 0$

C. $M^3 - 3M^2 + M = 0$

D. $M^2 - M + 5I = 0$

Your Answer: Correct Answer: B Not Attempted Time taken: 00min 00sec Discuss

Q #23 Multiple Choice Type Award: 1 Penalty: 0.33 Databases

Under a relational database system, in the most general case, if table R has a foreign key (FK) constraint referencing table S, then, via the FK,

A. each tuple in R is related to zero or more tuples in S.

B. each tuple in R is related to zero or one tuple in S.

C. each tuple in R is related to exactly one tuple in S.

D. each tuple in R is related to one or more tuples in S.

Your Answer: Correct Answer: B Not Attempted Time taken: 00min 00sec Discuss

Q #24 Multiple Choice Type Award: 1 Penalty: 0.33 Databases

Consider the following two properties.

I. a lossless join decomposition
II. dependency preserving

For any schema,

A. there is always a BCNF refinement that is both I and II.
B. there is always a BCNF refinement that is I, but not necessarily II.
C. there is always a BCNF refinement that is II, but not necessarily I.
D. there is never a BCNF refinement that is both I and II.

Your Answer: Correct Answer: B Not Attempted Time taken: 00min 00sec Discuss

Q #25 Multiple Choice Type Award: 1 Penalty: 0.33 Databases

Say that A is the primary key of table R, and that B is another, numeric attribute of R. Let r be the number of tuples in table R.

$$\left(\pi_A(\sigma_{B<5}(R))\right) \bowtie \left(\pi_A(\sigma_{B\geq 5}(R))\right)$$

How many tuples will result from the above relational algebra expression?

A. 0

B. 1

C. r^2

D. r

Your Answer: | Correct Answer: A | Not Attempted | Time taken: 00min 00sec | Discuss

Q #26 | Multiple Select Type | Award: 2 | Penalty: 0 | Databases

Consider the relation T with attributes A, B, C, D, E, F, and G and with the following functional dependencies (FDs):

$$A \rightarrow B \qquad BD \rightarrow F$$
$$AC \rightarrow E \qquad @ \rightarrow D$$

Unfortunately we do not know what '@' is. It could be any nonempty subset of T's attributes. (In particular, '@' might even contain D itself, which would make "$@ \rightarrow D$" a trivial dependency.)

Which of the following must be true, regardless of what is inside '@'? (Select all that apply)

A. A and G must be in every key.

B. E can never be in a key.

C. F can never be in a key.

D. $ACDG$ is a key.

Your Answer: | Correct Answer: A;B | Not Attempted | Time taken: 00min 00sec | Discuss

Q #27 | Multiple Select Type | Award: 2 | Penalty: 0 | Databases

The table *Arc*(x, y) currently has the following tuples (note there are duplicates):
$(1,2), (1,2), (2,3), (3,4), (3,4), (4,1), (4,1), (4,1), (4,2)$. Compute the result of the query:

```
SELECT a1.x, a2.y, COUNT(*)
FROM Arc a1, Arc a2
WHERE a1.y = a2.x
GROUP BY a1.x, a2.y;
```

Which of the following tuples is/are in the result?

A. $(1,3,2)$

B. $(2,4,6)$

C. $(3,1,4)$

D. $(3,1,6)$

Your Answer: | Correct Answer: A;D | Not Attempted | Time taken: 00min 00sec | Discuss

Q #28 Multiple Select Type | Award: 2 | Penalty: 0 | Databases

T_1	$R(A)$	$R(B)$							$W(B)$
T_2			$R(A)$	$R(B)$	$W(A)$				
T_3						$R(B)$	$R(C)$	$W(C)$	

Consider the preceding schedule. A, B, and C are positive integers. Each transaction reads in two integers, adds them, and writes the result. Which of the following statements is/are true?

A. The schedule avoids cascading aborts.
B. The schedule is conflict serializable.
C. The schedule is view serializable.
D. The schedule is equivalent to some serial schedule.

Your Answer: | Correct Answer: A | Not Attempted | Time taken: 00min 00sec | Discuss

Q #29 Multiple Select Type | Award: 2 | Penalty: 0 | Graph Theory

Let $G - v$ or $G - e$ indicate the graph obtained after removing v or e respectively from G. Recall that a bridge is an edge e such that $G - e$ has more components than G, and an articulation point is a vertex v such that $G - v$ has more components than G.

Which of the following statements is/are true ?

A. If $G = (V, E)$ is an undirected connected graph, $v \in V$ a vertex, then $G - v$ has at most 2 connected components.

B. If $G = (V, E)$ is an undirected connected graph, $e \in E$ an edge, then $G - e$ has at most 2 connected components.

C. If $G = (V, E)$ is an undirected graph and $e \in E$ an edge contained in a cycle, then e is not a bridge.

D. If $G = (V, E)$ is an undirected graph and $v \in V$ a vertex contained in a cycle, then v is not an articulation point.

Your Answer: | Correct Answer: B;C | Not Attempted | Time taken: 00min 00sec | Discuss

Q #30 Numerical Type | Award: 2 | Penalty: 0 | Graph Theory

We are given as input a DAG $G = (V, A)$, where $V = \{1, 2, \ldots, 10\}$. The **most critical arc** of G is defined as the arc (i.e. a directed edge) $ij \in A$ such that removing ij from G **minimizes** the number of distinct paths from vertext 1 to vertex 10.

Find the most critical arc E of the graph below. The number of distinct paths from vertex 1 to 10 , after removing E from G, is?

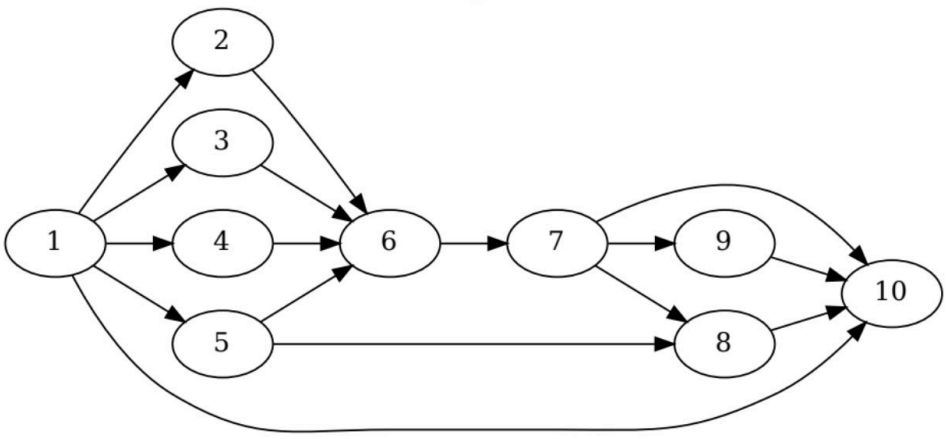

Your Answer: | Correct Answer: 2 | Not Attempted | Time taken: 00min 00sec | Discuss

Q #31 Multiple Choice Type | Award: 2 | Penalty: 0.67 | Mathematical Logic

Let $p_1, p_2, \ldots, p_n$ be propositions. Consider the formula

$$\bigwedge_{i=1}^{n-1} \bigwedge_{j=i+1}^{n} (\neg p_i \vee \neg p_j).$$

Which of the following statements is logically equivalent to the above formula?

A. $p_1, p_2, \ldots, p_n$ are all true.

B. Exactly one of $p_1, p_2, \ldots, p_n$ is true.

C. At most one of $p_1, p_2, \ldots, p_n$ is true.

D. None of $p_1, p_2, \ldots, p_n$ is true.

Your Answer: | Correct Answer: C | Not Attempted | Time taken: 00min 00sec | Discuss

Q #32 Multiple Select Type | Award: 2 | Penalty: 0 | Combinatory

Analyze the following statements. Which of the following statements is/are false?

A. Let $A = \mathcal{P}(X)$ be the set of all subsets of a set X. The relation

$$\preceq = \{(a, a') : a \in A,\ a' \in A,\ a \subseteq a'\}$$

is a partial order relation.

B. If R is a binary relation that is symmetric and antisymmetric, then $R = \varnothing$.

C. Let R be a reflexive relation on a set A. Then R is an equivalence relation if and only if

$$(a, b) \in R \text{ and } (b, c) \in R \Rightarrow (c, a) \in R.$$

D. Let $F : A \to B$ and $G : B \to C$ be invertible functions. Then the composition $G \circ F : A \to C$ is an invertible function.

Your Answer: | Correct Answer: B | Not Attempted | Time taken: 00min 00sec | Discuss

Q #33 Multiple Choice Type | Award: 2 | Penalty: 0.67 | CO & Architecture

Suppose that, in a program execution of 1000 instructions, there are 15 instruction cache (I-cache) misses, 50 data cache (D-cache) misses, and 10 $L2$ cache misses. 20% of the instructions are load or store instructions. The $L1$ hit time is 1 cycle for the I-cache and D-cache. The $L2$-hit time is 8 cycles. The $L2$ miss penalty is 120 cycles (time to access and transfer a block from main memory). What is the average memory access time (AMAT) ?

A. 1.62 cycles

B. 2.44 cycles

C. 3.10 cycles

D. 6.85 cycles

Your Answer: | Correct Answer: B | Not Attempted | Time taken: 00min 00sec | Discuss

Q #34 | Multiple Choice Type | Award: 2 | Penalty: 0.67 | CO & Architecture

A machine M_1 operates at 1400 MHz and has three types of instructions: A, B, and C, which take 1, 2, and 4 cycles, respectively. A certain program P, when executed on this machine, used 20% instructions of type A, 30% instructions of type B, and 50% instructions of type C.

A machine M_2 also has three types of instructions: D, E, and F, which take 3, 4, and 5 cycles, respectively. When program P is executed on M_2, it uses 30% instructions of type D, 40% instructions of type E, and 30% instructions of type F.

Select the alternative that correctly indicates the operating frequency that machine M_2 must have so that program P executes in the same amount of time on both machines.

A. 1.6 GHz
B. 1.8 GHz
C. 2.0 GHz
D. 2.2 GHz

Your Answer: | Correct Answer: C | Not Attempted | Time taken: 00min 00sec | Discuss

Q #35 | Multiple Select Type | Award: 2 | Penalty: 0 | Theory of Computation

GO-words are sequences of letters a and b that are constructed according to the following rules:

I. The sequence consisting of no letters is a GO-word.

II. If the sequence W is a GO-word, then the sequence that begins with a, followed by W and ending in b, written aWb, is a GO-word.

III. If the sequences U and V are GO-words, then the sequence U followed by V, written UV, is a GO-word.

All GO-words are constructed using these rules. The *length* of a GO-word is the number of letters that occur in it. For example, *aabb* and *abab* are GO-words of length 4.

Which of the following statements is/are necessarily true for any GO-word W?

A. Every GO-word has an even length.

B. The number of occurrences of a in W is necessarily equal to the number of occurrences of b in W.

C. In all prefixes of W, the number of occurrences of a is greater than or equal to the number of occurrences of b.

D. In all prefixes of W, the number of occurrences of a is equal to the number of occurrences of b.

Your Answer: | Correct Answer: A;B;C | Not Attempted | Time taken: 00min 00sec | Discuss

Q #36 Numerical Type | Award: 2 | Penalty: 0 | Theory of Computation

Suppose that we have a set of *domino tiles*. Each domino piece has a string at the top and a string at the bottom, for example:

$$\begin{array}{|c|}\hline abb \\ \hline bc \\ \hline\end{array}$$

So a set S of dominos might look like:

$$S = \left\{ \begin{array}{|c|}\hline b \\ \hline ca \\ \hline\end{array}, \begin{array}{|c|}\hline a \\ \hline ab \\ \hline\end{array}, \begin{array}{|c|}\hline ca \\ \hline a \\ \hline\end{array}, \begin{array}{|c|}\hline abc \\ \hline c \\ \hline\end{array} \right\}$$

A *match* for S is an ordered list of one or more dominos from S, such that if you read the symbols on the tops, this makes the same string as reading the symbols on the bottom. You can use the same domino more than once in a match, and you do not have to use all the elements of S. For example, here is a match for our example set:

$$\begin{array}{|c|}\hline a \\ \hline ab \\ \hline\end{array} \begin{array}{|c|}\hline b \\ \hline ca \\ \hline\end{array} \begin{array}{|c|}\hline ca \\ \hline a \\ \hline\end{array} \begin{array}{|c|}\hline a \\ \hline ab \\ \hline\end{array} \begin{array}{|c|}\hline abc \\ \hline c \\ \hline\end{array}$$

The tops and bottoms of the dominos both form the string abcaaabc

Consider the following set of tiles:

$$\left\{ \begin{array}{|c|}\hline X \\ \hline U \\ \hline\end{array}, \begin{array}{|c|}\hline UU \\ \hline U \\ \hline\end{array}, \begin{array}{|c|}\hline Z \\ \hline X \\ \hline\end{array}, \begin{array}{|c|}\hline E \\ \hline ZE \\ \hline\end{array}, \begin{array}{|c|}\hline Y \\ \hline U \\ \hline\end{array}, \begin{array}{|c|}\hline Z \\ \hline Y \\ \hline\end{array} \right\}$$

Let n be the least number of tiles that can be used in a match (counting any repetitions). Let m be the number of different matches using this smallest number of tiles (i.e. n). What is $m + n$?

Your Answer: | Correct Answer: 6 | Not Attempted | Time taken: 00min 00sec | Discuss

Q #37 Multiple Choice Type | Award: 2 | Penalty: 0.67 | Theory of Computation

Consider the following DFA:

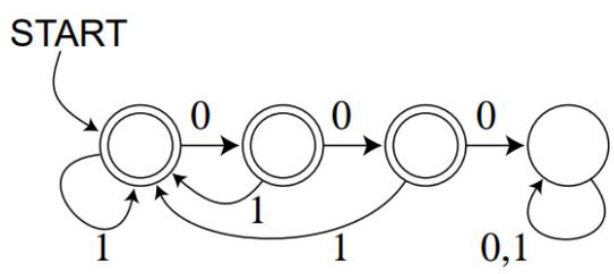

Let a_n denote the number of binary strings of length n that are accepted by this DFA. For $n >= 4$, Which of the following recurrence relations correctly defines a_n?

A. $a_n = a_{n-1} + a_{n-2} + a_{n-3}$

B. $a_n = 2a_{n-1} - a_{n-3}$

C. $a_n = a_{n-1} + a_{n-2} + 1$

D. $a_n = a_{n-1} + a_{n-2} + a_{n-4}$

Your Answer: | Correct Answer: A | Not Attempted | Time taken: 00min 00sec | Discuss

Q #38 Multiple Select Type | Award: 2 | Penalty: 0 | Theory of Computation

Which of the following statements is/are true?

A. The language $\{< \mathrm{M} >| \mathrm{M}$ is a Turing machine $\& \ \mathrm{L(M)}$ is finite or infinite $\}$ is undecidable.

B. If decision problem A reduces to B, and A is decidable, then B is decidable.

C. The language $\{< \mathrm{M} >| \mathrm{M}$ is a Turing machine $\& \ \mathrm{L(M)}$ is countable $\}$ is undecidable.

D. A language is decidable iff both it and its complement are recognizable.

Your Answer: | Correct Answer: D | Not Attempted | Time taken: 00min 00sec | Discuss

Q #39 Multiple Choice Type | Award: 2 | Penalty: 0.67 | Digital Logic

If X and Y are inputs and the Difference $(D = X - Y)$ and the Borrow (B) are the outputs, which one of the following diagrams implements a half-subtractor?

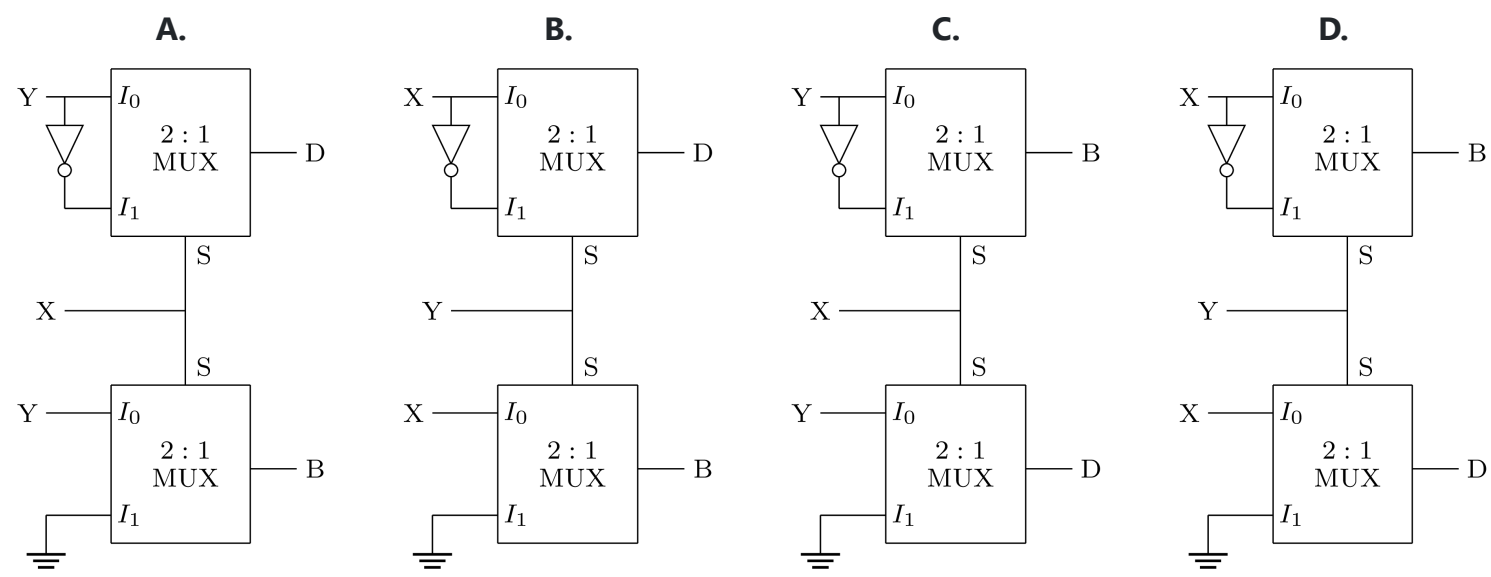

Your Answer: | Correct Answer: A | Not Attempted | Time taken: 00min 00sec | Discuss

Q #40 Numerical Type | Award: 2 | Penalty: 0 | Digital Logic

The state diagram of a finite state machine (FSM) designed to detect an overlapping sequence of three bits is shown in the figure. The FSM has an input 'In' and an output 'Out'. The initial state of the FSM is S_0.

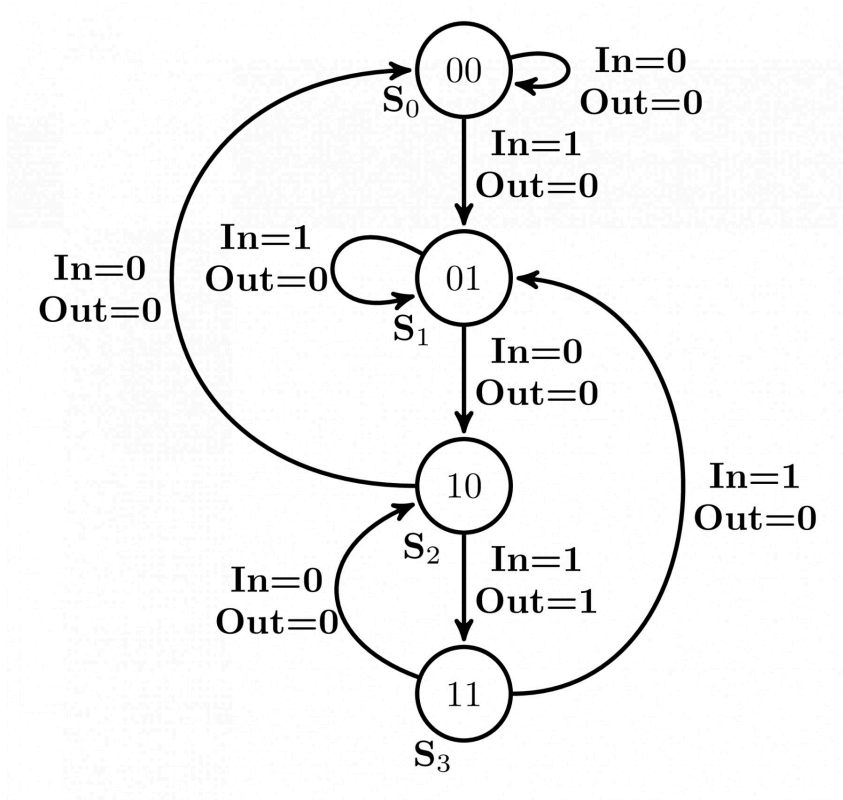

If the input sequence is 10101101001101, starting with the left-most bit, then the number of times 'Out' will be 1 is _____

Your Answer: | Correct Answer: 4:4 | Not Attempted | Time taken: 00min 00sec | Discuss

Q #41 Multiple Choice Type | Award: 2 | Penalty: 0.67 | Computer Networks

An IP router with a Maximum Transmission Unit (MTU) of 1500 bytes receives an IP packet of total size 4404 bytes. The IP header length is 20 bytes. The packet is fragmented at the router.

Which of the following options correctly gives the tuple

$$(\text{Total Length},\ \text{Fragment Offset},\ \text{More Fragments flag})$$

for the IP fragments generated by the router?

A. Fragment 1: $(1500,\ 0,\ 1)$
Fragment 2: $(1500,\ 185,\ 1)$
Fragment 3: $(1444,\ 370,\ 0)$

B. Fragment 1: $(1500,\ 0,\ 1)$
Fragment 2: $(1480,\ 185,\ 1)$
Fragment 3: $(1444,\ 370,\ 0)$

C. Fragment 1: $(1480,\ 0,\ 1)$
Fragment 2: $(1480,\ 185,\ 1)$
Fragment 3: $(1464,\ 370,\ 0)$

D. Fragment 1: $(1500,\ 0,\ 1)$
Fragment 2: $(1500,\ 185,\ 0)$
Fragment 3: $(1444,\ 370,\ 0)$

Your Answer: | Correct Answer: A | Not Attempted | Time taken: 00min 00sec | Discuss

Q #42 Numerical Type | Award: 2 | Penalty: 0 | Computer Networks

Consider the network shown above, where switches $S1, S2, S3,$ and $S4$ use **distance-vector routing**. Each switch is directly connected to one host: $S1$–A, $S2$–B, $S3$–C, and $S4$–D.

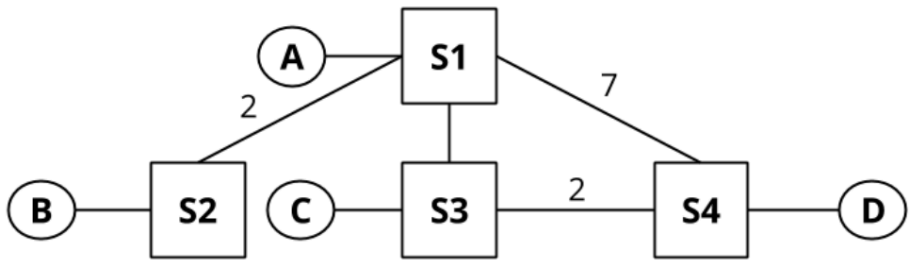

All links without an explicitly labeled cost have an implicit cost of 1. Initially, each switch knows only the route to its directly connected host. The initial routing tables are shown below.

Dest.	NextHop, Dist.
A	Direct, 1

S1

Dest.	NextHop, Dist.
B	Direct, 1

S2

Dest.	NextHop, Dist.
C	Direct, 1

S3

Dest.	NextHop, Dist.
D	Direct, 1

S4

The following events occur **sequentially**. Assume that no other events take place, and that a switch advertises its routes only when its routing table changes.

Event 1: $S3$ advertises its routes to $S1$.

Event 2: $S1$ advertises its routes to $S2$.

After processing both events, what will be the distance in $S2$'s routing table to destination C?

Your Answer: | Correct Answer: 4 | Not Attempted | Time taken: 00min 00sec | Discuss

Q #43 | Multiple Select Type | Award: 2 | Penalty: 0 | Computer Networks

Router A serves the following eight contiguous customer subnets:

$$198.35.80.0/23,\ 198.35.82.0/23,\ 198.35.84.0/23,\ 198.35.86.0/23,$$
$$198.35.88.0/23,\ 198.35.90.0/23,\ 198.35.92.0/23,\ 198.35.94.0/23$$

Router A is connected to above networks via Router B and Router C. Router B provides reachability to the first four subnets, and Router C provides reachability to the last four subnets.

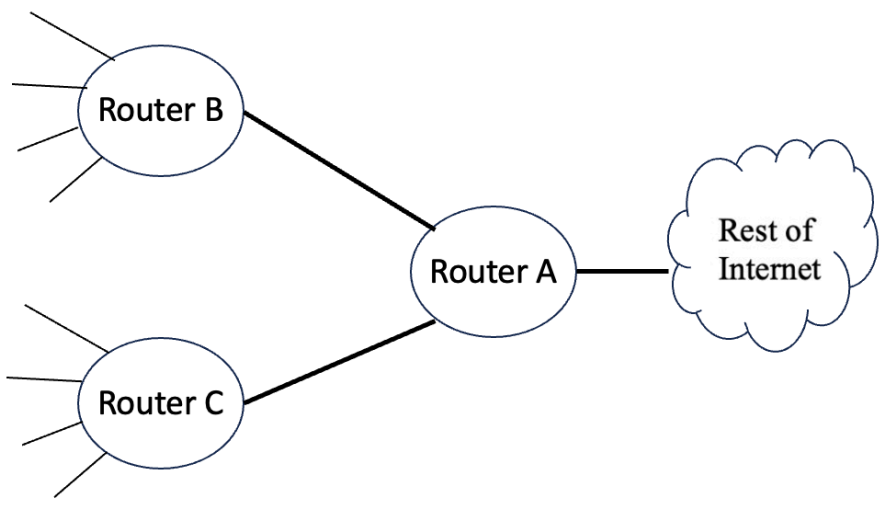

Routing follows the longest prefix matching rule. Router A already has the following routing table entry:

$$198.35.80.0/21 \text{ via Router B}$$

Router A wants to ensure that all packets destined to the last four subnets (i.e., $198.35.88.0/23$ through $198.35.94.0/23$) are forwarded via Router C.

Select the routing table entry that should be added in Router A to satisfy this requirement (More than one can be correct)

A. Router A adds an entry for $198.35.88.0/21$ via Router C

B. Router A adds an entry for $198.35.80.0/20$ via Router C

C. Router A adds an entry for $198.35.88.0/20$ via Router C

D. Router A adds an entry for $198.35.92.0/22$ via Router C

Your Answer: | Correct Answer: A;B | Not Attempted | Time taken: 00min 00sec | Discuss

Q #44 | Multiple Choice Type | Award: 2 | Penalty: 0.67 | Digital Logic

What are the minimum number of 2-to-1 multiplexers required to generate a 2-input AND gate and a 2-input Ex-OR gate?

A. 1 and 2

B. 1 and 3

C. 1 and 1

D. 2 and 2

Your Answer: | Correct Answer: A | Not Attempted | Time taken: 00min 00sec | Discuss

Q #45 | Multiple Choice Type | Award: 2 | Penalty: 0.67 | Compiler Design

Consider the grammar:

$$A ::= A\,x\,B \mid A\,y \mid z$$

$$B ::= z\,B \mid \epsilon$$

where $\{A, B\}$ is the set of nonterminal symbols, A is the start symbol, and $\{x, y, z\}$ is the set of terminal symbols, and ϵ denotes the empty string.

We remove the left recursion from the above grammar. Which grammar below generates the same language as the above grammar?

A.
$$A ::= z\,D$$
$$B ::= z\,B \mid \epsilon$$
$$C ::= x\,B \mid y$$
$$D ::= C\,D \mid \epsilon$$

B.
$$A ::= A\,C \mid z$$
$$B ::= z\,B \mid \epsilon$$
$$C ::= x\,C \mid y$$

C.
$$A ::= z\,D$$
$$B ::= z\,B \mid \epsilon$$
$$C ::= x\,B \mid z$$
$$D ::= C\,D \mid \epsilon$$

D. None of the other cases.

Your Answer: | Correct Answer: A | Not Attempted | Time taken: 00min 00sec | Discuss

Q #46 | Multiple Choice Type | Award: 2 | Penalty: 0.67 | Probability

There are two boxes, each containing two components. Each component is defective with probability $\frac{1}{4}$, independent of all other components. The probability that exactly one box contains exactly one defective component equals

A. $\frac{3}{8}$

B. $\frac{5}{8}$

C. $\frac{15}{32}$

D. $\frac{17}{32}$

Your Answer: | Correct Answer: C | Not Attempted | Time taken: 00min 00sec | Discuss

Q #47 | Multiple Select Type | Award: 2 | Penalty: 0 | Compiler Design

Consider the following grammar G:

$$S \rightarrow A\,x\,y \mid B\,x\,z$$
$$A \rightarrow a$$
$$B \rightarrow a$$

Which of the following is/are true for G?

A. G is unambiguous.

B. G is $\mathrm{SLR}(1)$.

C. G is $\mathrm{LALR}(1)$.

D. G is $\mathrm{LR}(1)$.

Your Answer: | Correct Answer: A | Not Attempted | Time taken: 00min 00sec | Discuss

Q #48 | Multiple Select Type | Award: 2 | Penalty: 0 | Operating System

Assume, for the following jobs, a FIFO scheduler and a single CPU. Each job has a required runtime, meaning the job needs that many time units on the CPU to complete.

$\mathrm{Job\ A}$ arrives at time 0 and requires $\mathtt{x}$ time units.

$\mathrm{Job\ B}$ arrives at time 5 and requires $\mathtt{y}$ time units.

$\mathrm{Job\ C}$ arrives at time 10 and requires $\mathtt{z}$ time units.

Assuming an average turnaround time between 10 and 20 time units (inclusive), which of the following values of $\mathtt{x}$, $\mathtt{y}$, and $\mathtt{z}$ are possible? Select all that apply.

A. $\mathtt{x} = 10,\ \mathtt{y} = 10,\ \mathtt{z} = 10$

B. $\mathbf{x} = 20,\ \mathbf{y} = 20,\ \mathbf{z} = 20$

C. $\mathbf{x} = 5,\ \mathbf{y} = 10,\ \mathbf{z} = 15$

D. $\mathbf{x} = 20,\ \mathbf{y} = 30,\ \mathbf{z} = 40$

Your Answer: | Correct Answer: A;C | Not Attempted | Time taken: 00min 00sec | Discuss

Q #49 | Multiple Select Type | Award: 2 | Penalty: 0 | Operating System

Some arrangements of threads and the locks they attempt to acquire can lead to deadlock. Assume that once a thread acquires a lock, it holds it until all required locks are acquired.

Which of the following arrangements will NOT lead to deadlock?

A. Thread 1 tries to acquire locks 1 and 2 in an arbitrary order.
Thread 2 tries to acquire locks 1 and 2 in fixed order: 1 then 2.

B. Thread 1 tries to acquire locks 1 and 2 in fixed order: 1 then 2.
Thread 2 tries to acquire locks 1 and 2 in fixed order: 2 then 1.

C. Thread 1 tries to acquire locks 1 and 2 in fixed order: 1 then 2.
Thread 2 tries to acquire locks $1, 2,$ and 3 in fixed order: 1 then 2 then 3.

D. Thread 1 tries to acquire locks 1 and 2 in fixed order: 2 then 1.
Thread 2 tries to acquire locks 1 and 2 in fixed order: 2 then 1.

Your Answer: | Correct Answer: C;D | Not Attempted | Time taken: 00min 00sec | Discuss

Q #50 | Multiple Select Type | Award: 2 | Penalty: 0 | Compiler Design

Consider the control-flow graph shown below:

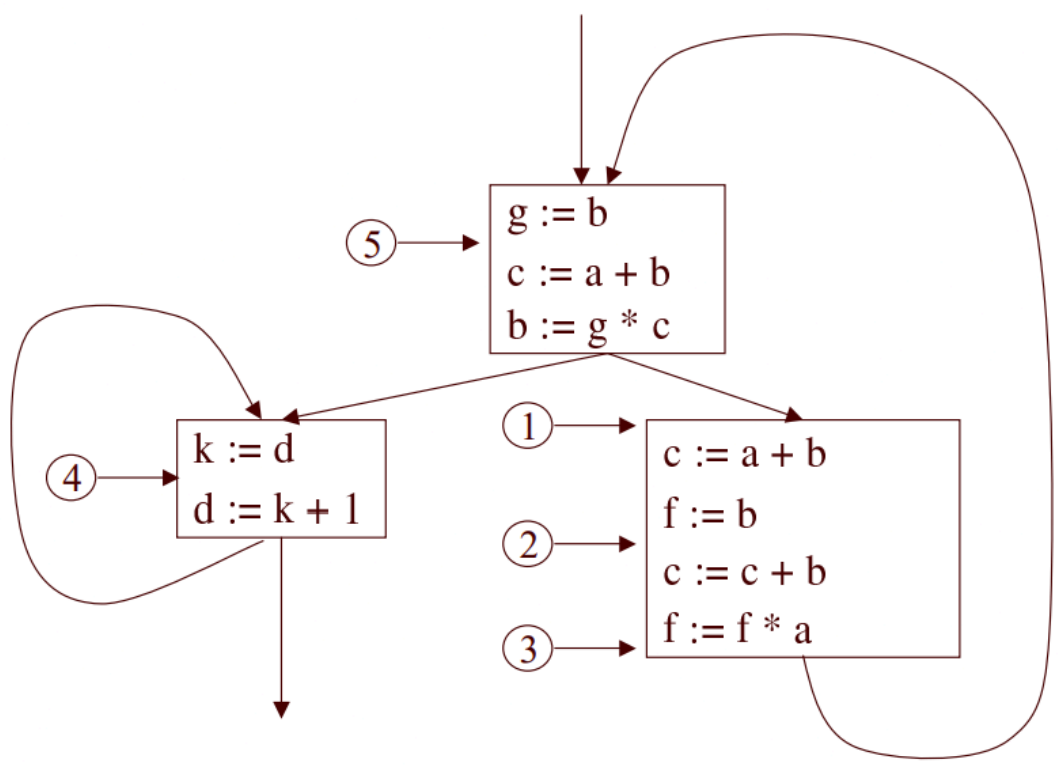

Assume that there are no live variables on exit. Which of the following choices correctly lists the set of live variables at the points $1 - 5$ in the program ? (Select all that apply)

A. Live at $1 = \{a, b\}$

B. Live at $2 = \{a, b, d, f\}$

C. Live at $3 = \{a, b, d\}$

D. Live at $5 = \{a, b, d, g\}$

Your Answer: | Correct Answer: C;D | Not Attempted | Time taken: 00min 00sec | Discuss

Q #51 Multiple Choice Type | Award: 2 | Penalty: 0.67 | Programming in C

A **palindrome** is a string that reads the same forward and backward. For example, `"radar"` and `"level"` are palindromes, while `"hello"` is not.

The following function recursively determines whether a given string is a palindrome. The function returns `1` if the given string is a palindrome, and `0` otherwise.

```
int isPalindrome(char A[], int n)
{
  if (n <= 1) return 1;
  if (A[0] != A[n-1]) return 0;
  ----------BLANK--------
}
```

Choose the correct option to replace the blank.

A. `return isPalindrome(&A[1], n-1);`
B. `return isPalindrome(&A[1], n-2);`
C. `return isPalindrome(A, n/2);`
D. `return isPalindrome(&A[2], n-2);`

Your Answer: | Correct Answer: B | Not Attempted | Time taken: 00min 00sec | Discuss

Q #52 Numerical Type | Award: 2 | Penalty: 0 | Programming in C

What is the value printed by the following program?

```
int h(int a, int b)
{
  a = b - a;
  return b - a;
}

int main()
{
  int a = 9, b = 2;
  a = h(a, b);
  b = h(a, b);
  printf("%d\n", a);
}
```

Your Answer: | Correct Answer: 9 | Not Attempted | Time taken: 00min 00sec | Discuss

Q #53 Multiple Choice Type | Award: 2 | Penalty: 0.67 | Algorithms

Consider a variant of the deterministic **Quicksort** algorithm in which the pivot selection is done using a function f that maps each positive integer k to an index in $\{1, 2, \ldots, k\}$.

If the size of the current array A is k, the algorithm selects the $f(k)$-th element $A[f(k)]$ as the pivot.

Let $T_f(n)$ denote the worst-case time complexity of this deterministic quicksort algorithm on an array of n **distinct** numbers that are already in **sorted order**, where the pivot selection is done using the function f.

Let $f_1(k) = 1, \qquad f_2(k) = \lceil k/2 \rceil, \qquad f_3(k) = k.$

Which of the following statements is **TRUE**?

A. $T_{f_1}(n) = \Theta(n),\ T_{f_2}(n) = \Theta(n),\ \text{and } T_{f_3}(n) = \Theta(n)$
B. $T_{f_1}(n) = \Theta(n),\ T_{f_2}(n) = \Theta(n \log n),\ \text{and } T_{f_3}(n) = \Theta(n^2)$
C. $T_{f_1}(n) = \Theta(n^2),\ T_{f_2}(n) = \Theta(n \log n),\ \text{and } T_{f_3}(n) = \Theta(n)$
D. $T_{f_1}(n) = \Theta(n^2),\ T_{f_2}(n) = \Theta(n \log n),\ \text{and } T_{f_3}(n) = \Theta(n^2)$

Your Answer: | Correct Answer: D | Not Attempted | Time taken: 00min 00sec | Discuss

Q #54

Numerical Type | Award: 2 | Penalty: 0 | Data Structures

In a **max-heap**, the largest element must appear in position 1, and the second largest element must appear in either position 2 or 3. Assume that the max-heap contains **distinct elements**.

How many distinct positions (indices) in a max-heap can contain the 3rd largest element?

Your Answer: | Correct Answer: 6 | Not Attempted | Time taken: 00min 00sec | Discuss

Q #55

Multiple Choice Type | Award: 2 | Penalty: 0.67 | Algorithms

Consider the **0/1-Knapsack** problem, where you have n items with weights $w_1, w_2, \ldots, w_n$ and values $v_1, v_2, \ldots, v_n$, respectively, and a knapsack of capacity W. The task is to select a subset of these items such that their total weight is at most W, and their total value is as large as possible.

Suppose you are guaranteed that the weights are in non-increasing order $(w_1 \geq w_2 \geq \cdots \geq w_n)$ and the values are in non-decreasing order $(v_1 \leq v_2 \leq \cdots \leq v_n)$. That is, the first item has the largest weight and the smallest value. Which of the following statements describes a greedy-choice property possessed by the problem in this case? (Assume that the optimal solution is non-empty.)

A. There is an optimal solution that contains the first item.
B. There is an optimal solution that contains the last item.
C. There is an optimal solution that contains the item whose value-to-weight ratio is closest to 1.
D. There is no greedy-choice property, as the problem does not admit a correct greedy algorithm.

Your Answer: | Correct Answer: B | Not Attempted | Time taken: 00min 00sec | Discuss

Copyright & Stuff